Pininfarina
Istituto Tecnico Industriale Statale

Computer Science and Telecommunications

Technical Report:

"Relay Board, Sensors, and Arduino"

CANDIDATE
Cammarata Alessio

CLASS
Class 5^A info

Academic Year 2023/2024

Contents

Introduction **1**

Components and Tools Used **1**

Electrical Schematics **2**

Locomotive Circuit **4**

Turnout Circuit **5**

Sensor Circuit **7**

Conclusion **8**

References 9

1 Introduction

The objective of the following report is to **demonstrate and explain** in greater detail **how the electrical circuits related to the TrainTrack Manager project operate.**

The goal is to enable the control of locomotives via DCC decoders, as well as the turnouts and their respective sensors, through electricity and a dedicated circuit management interface. In this report, **the electrical scenarios regarding the locomotives, turnouts, and sensors will be illustrated in depth.**

2 Components and Tools Used

- **1 Arduino Mega 2560**
- **1 Arduino Uno Rev 3**
- **18V Universal Switching Power Supply**
- **8 18V Relays**
- **8 RFID Sensors**
- **3 RFID Tags**
- **2 Diodes**
- **8 Polarized LEDs**
- **Copper wiring**
- **Pre-assembled opto-isolated electromagnetic relay board**
- **Resistors:**
  - 1 3.3 kΩ resistor
- **Electrician's tweezers**
- **Electrician's scissors**

3 Electrical Schematics

This section presents the primary electrical schematics used in the project, including those for **Arduino Uno** [1] and **Arduino Mega** [2], with links provided for reference.

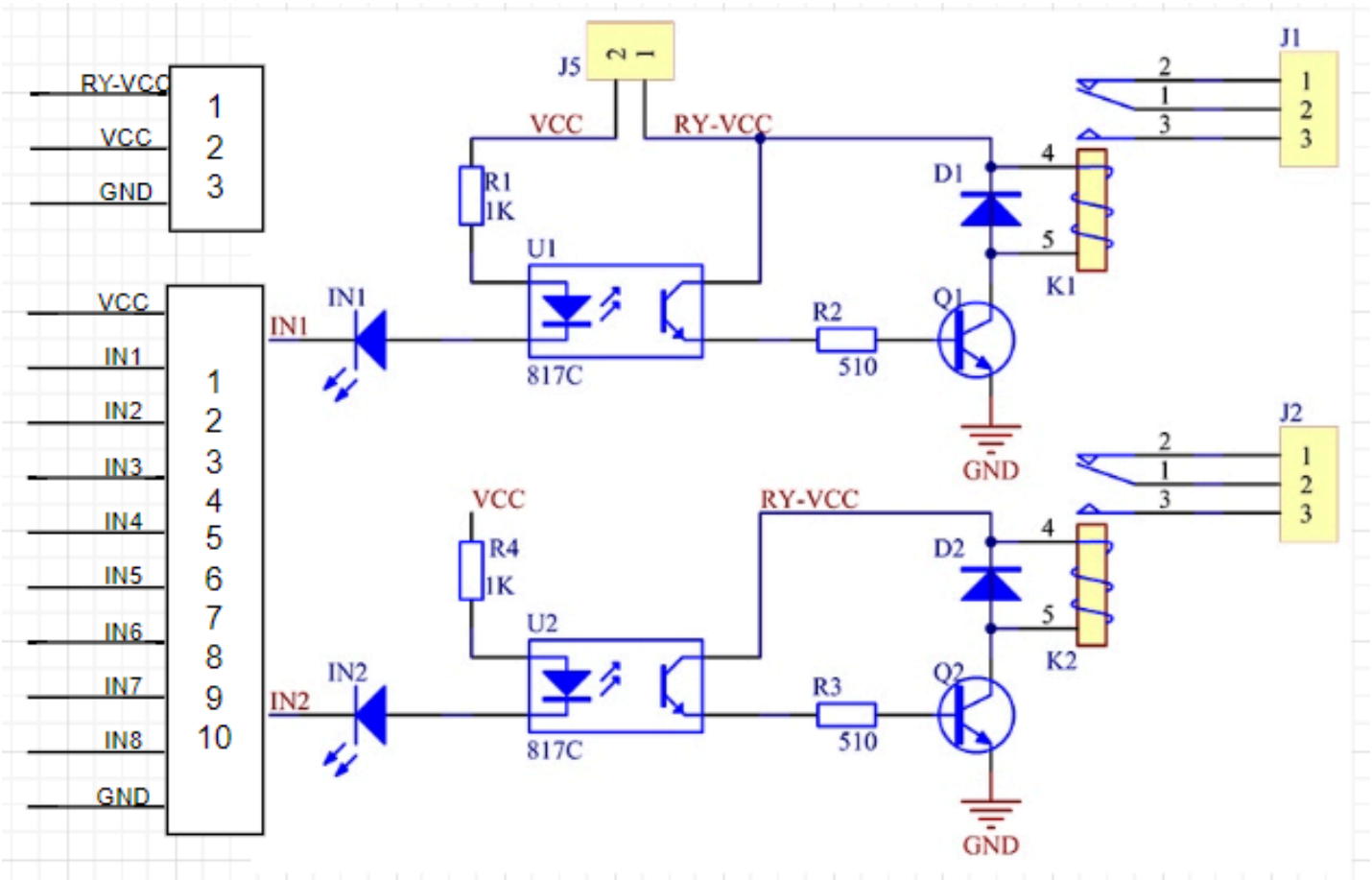

Figure 1: Electrical schematic of the pre-assembled opto-isolated electromagnetic relay board

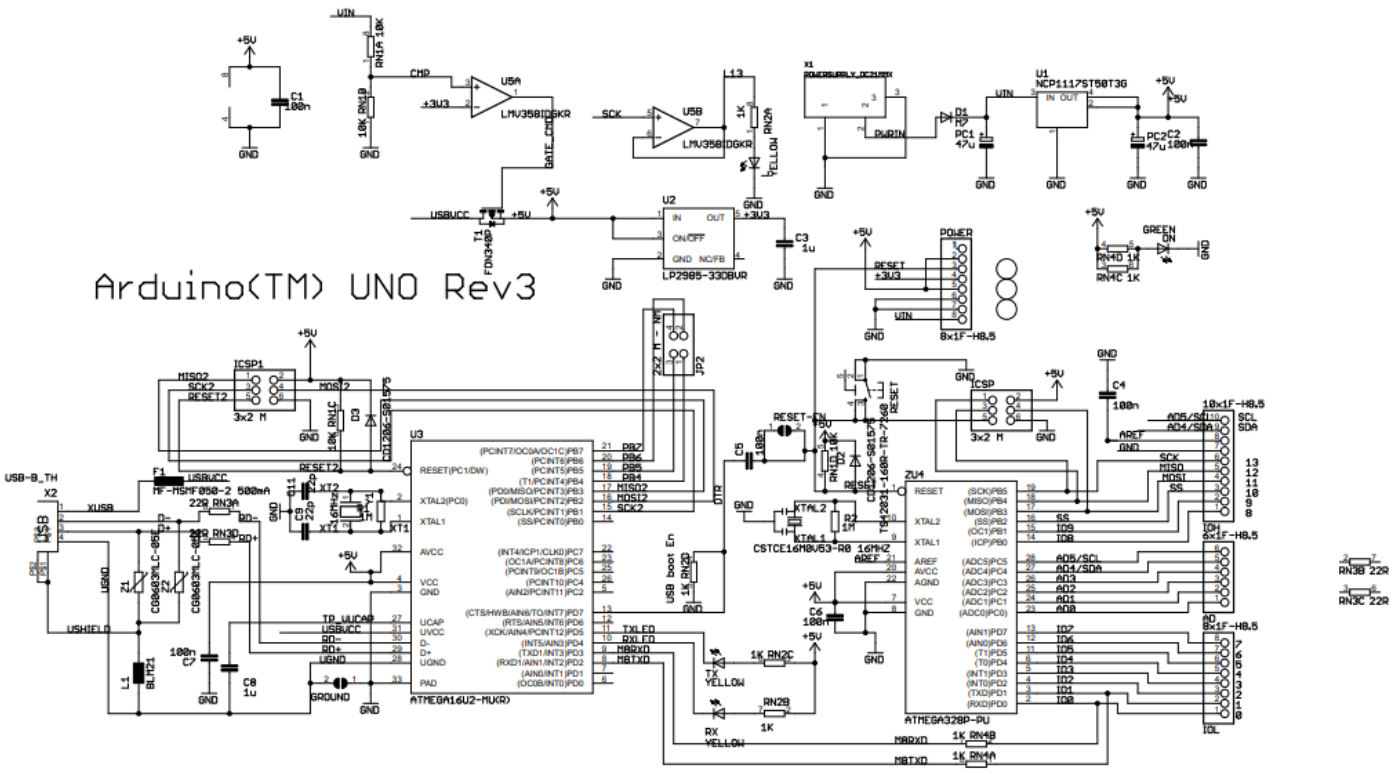

Figure 2: Electrical schematic of the Arduino Uno Rev3 board

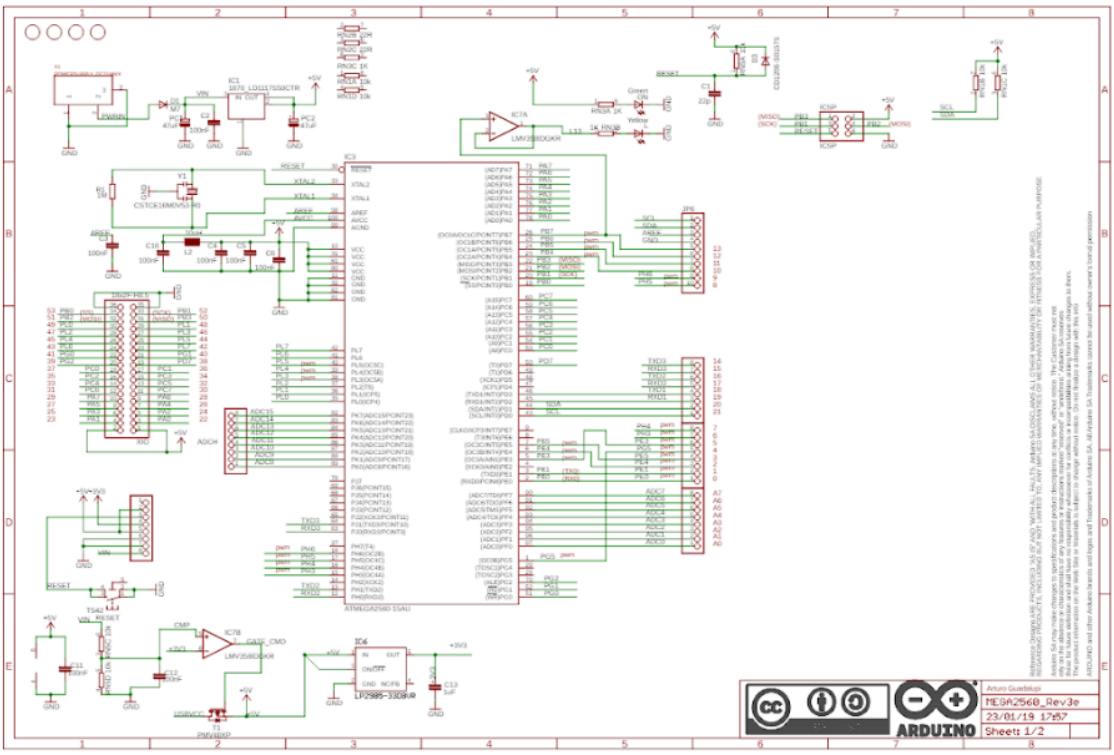

Figure 3: Electrical schematic of the Arduino Mega 2560 board

4 Locomotive Circuit

The locomotive circuit utilizes the **DCCpp protocol**, which allows for the **transmission of signals through the electrical current** by modulating the signal and decoding it using specific decoders installed on the locomotives. I am providing the electrical schematic for these decoders for reference here [3].

In addition to the computer, which is a constant component across all circuits, this setup requires:

- DCC decoders
- Tracks
- Motor Shield Rev3
- 12V Power Supply
- Arduino Mega 2560

The electrical circuit is distributed across the railway tracks; the 12V power supply **powers the individual locomotive motors**. A **Motor Shield Rev3** is mounted on the Arduino to handle **signal modulation**, while the computer sends the commands to the Arduino. As shown in the diagram:

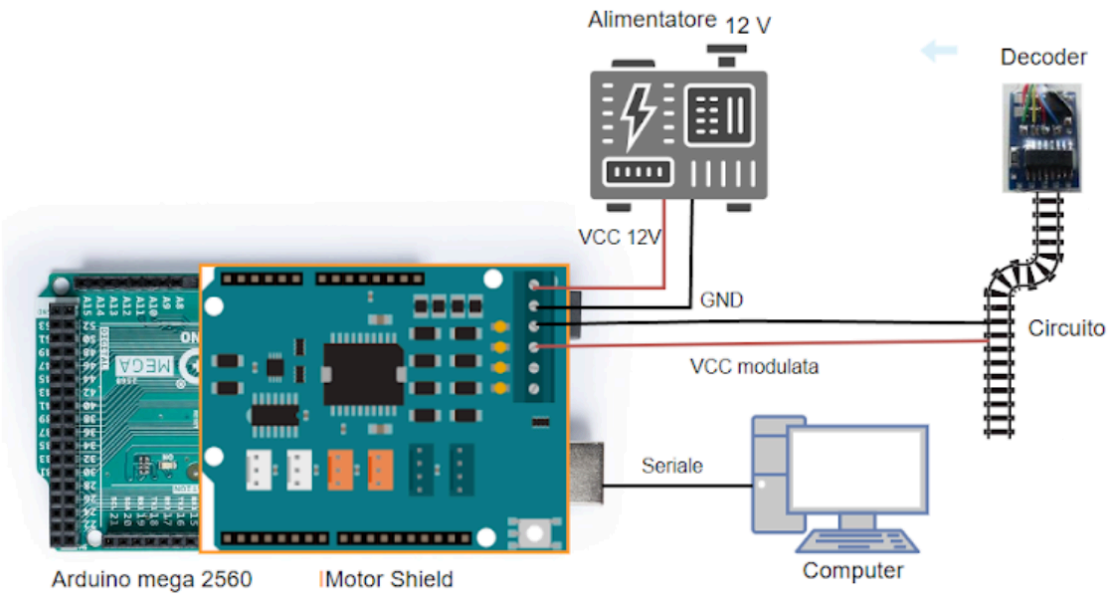

Figure 4: Wiring logic for locomotive control with Arduino Mega 2560

5 Turnout Circuit

The creation of the relay circuit involves the use of a **pre-assembled opto-isolated board**, the schematic of which is included in the electrical diagrams.

We decided to use **optocouplers** because, given the presence of coils, there was a high probability of **interference** caused by current kickback (back-EMF).

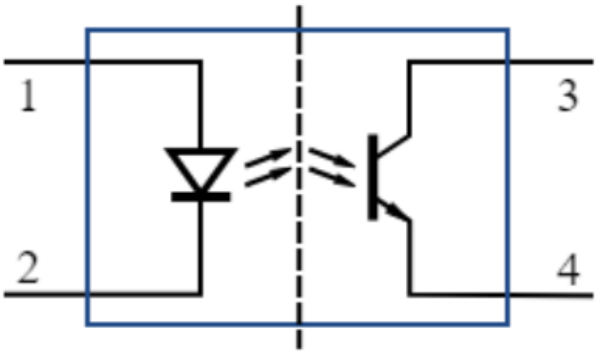

Figure 5: Arduino Mega 2560 board electrical schematic

The optocoupler allows for **physically isolating the circuit so as not to disturb the Arduino**, which acts as the current generator. Therefore, an additional switching power supply will be required to trigger the relays/ turnouts, which operate at a voltage of 18V.

The turnout circuit, unlike the locomotive circuit, **includes additional components**; the following are required for this setup:

- Diodes
- Polarized LEDs
- Resistors
- 18V Universal Switching Power Supply
- Pre-assembled opto-isolated electromagnetic relay board
- 12-18V Step-by-step relays
- Arduino Mega 2560

This circuit provides the **capability to command mechanical turnouts using 18V step-by-step relays, which are triggered by the 5V electromagnetic relays** on the board that require the **lower voltage that the Arduino is capable of providing**. Diodes are mounted at both the beginning and the end of the turnout power supply line to prevent back-EMF interference; furthermore, for the same reason, **LEDs and resistors were mounted on each turnout to dissipate the return current**. As shown in the diagram:

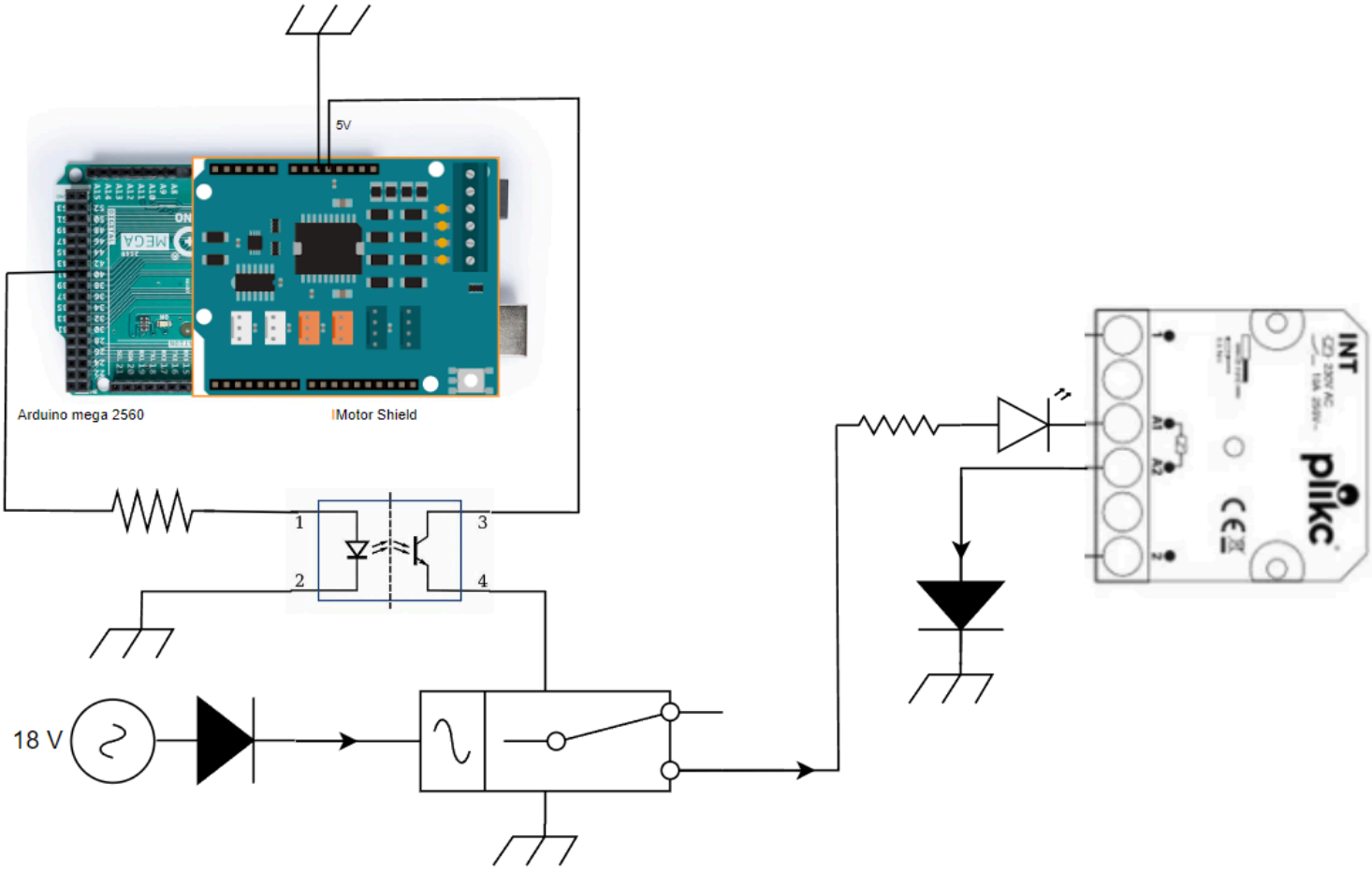

Figure 6: Turnout electrical schematic

6 Sensor Circuit

The sensor circuit involves the **use of MFRC522 RFID sensors**; these are RFID readers that allow reading RFID tags and sending the message to the Arduino via **SPI communication** [4] .

This circuit does not require any specialized components; the necessary ones are:

- MFRC522 RFID Sensor
- Arduino Uno Rev3
- Copper wiring

RC522 is the module that includes the MFRC522 chip along with all the components necessary to operate easily with Arduino. The electrical schematic is as follows:

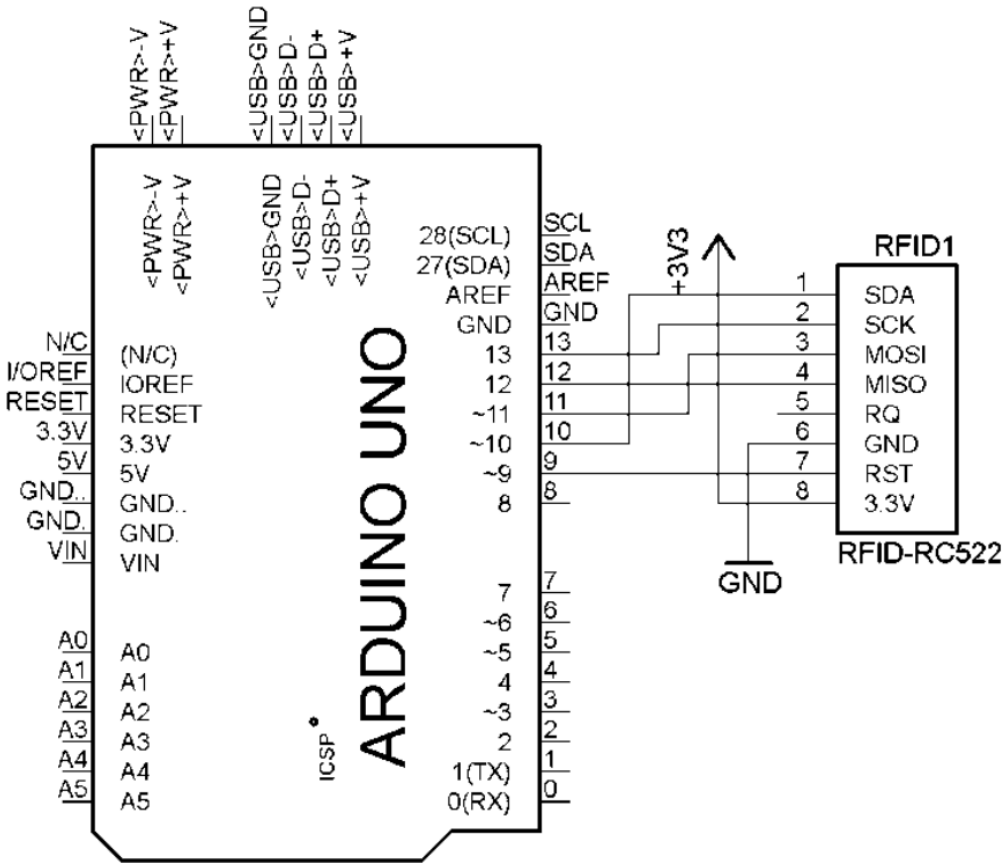

Figure 7: Arduino Uno Rev3 sensor board electrical schematic

7 Conclusion

The circuits presented **are fully functional and strictly integrated into the TrainTrack Manager project.**
They play a fundamental role in managing the locomotives, turnouts, and sensors. They **are entirely governed by the computer, which manages the various circuits based on the specific signals it sends and their respective destinations.**

References

[1] "Arduino Uno Rev3 Electrical Schematic." [Online]. Available: https://www.arduino.cc/en/uploads/Main/Arduino_Uno_Rev3-schematic.pdf

[2] "Arduino Mega 2560 Electrical Schematic." [Online]. Available: https://www.arduino.cc/en/uploads/Main/arduino-mega2560-schematic.pdf

[3] "DCC Decoder Electrical Schematic." [Online]. Available: https://www.dccworld.it/index.php?page=dccpratico/progetti/decoder.html

[4] "SPI Communication." [Online]. Available: https://it.wikipedia.org/wiki/Serial_Peripheral_Interface

QR_CODES

Arduino Uno Rev3 Electrical Schematic

Arduino Mega 2560 Electrical Schematic

DCC Decoder Electrical Schematic

SPI Communication